CCG1 EMCA Paddle Card Reference Design

Table Of Contents

Sheet	Description
1	Table of Contents
2	Type-C Plug/WirePad
3	CCG1 CYPD1103-35FNXI

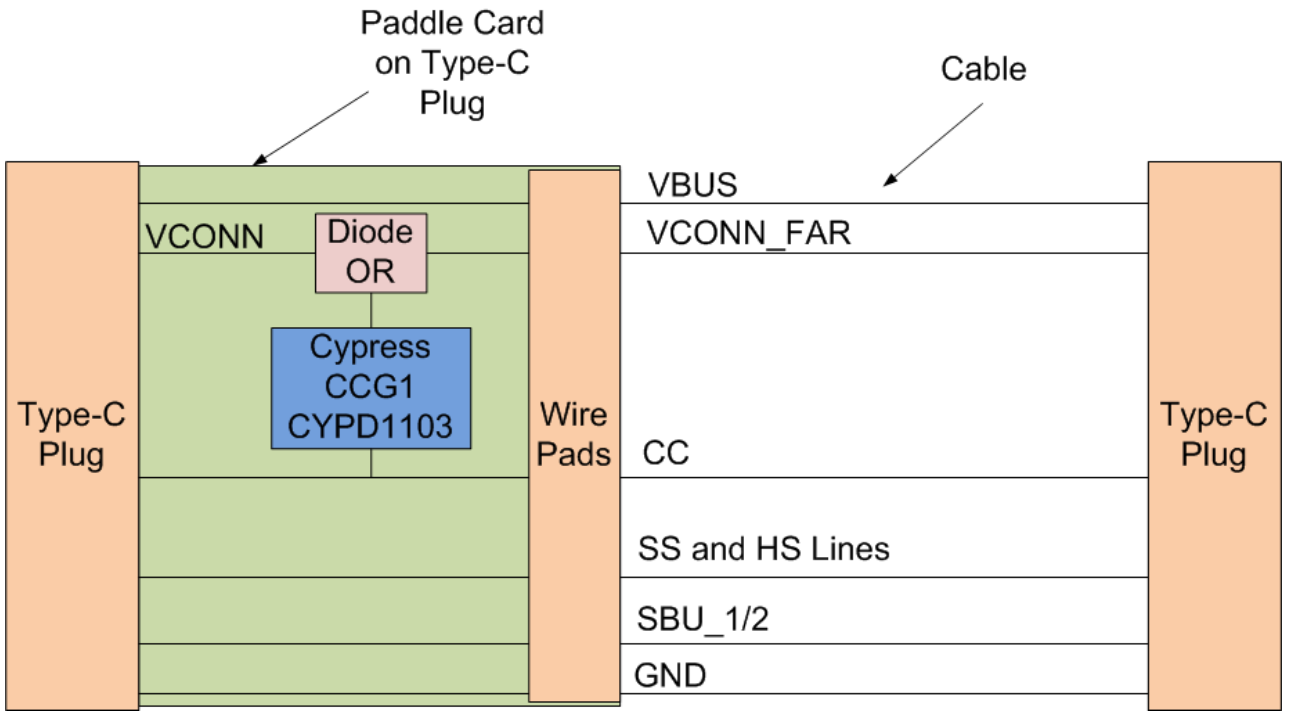

Title: CCG1 EMCA Paddle Card Reference Design		
Size: B	Document Number: <Doc>	Rev: 1
Date: Monday, April 06, 2015	Sheet 1 of 3	

Type-C Plug/WirePad

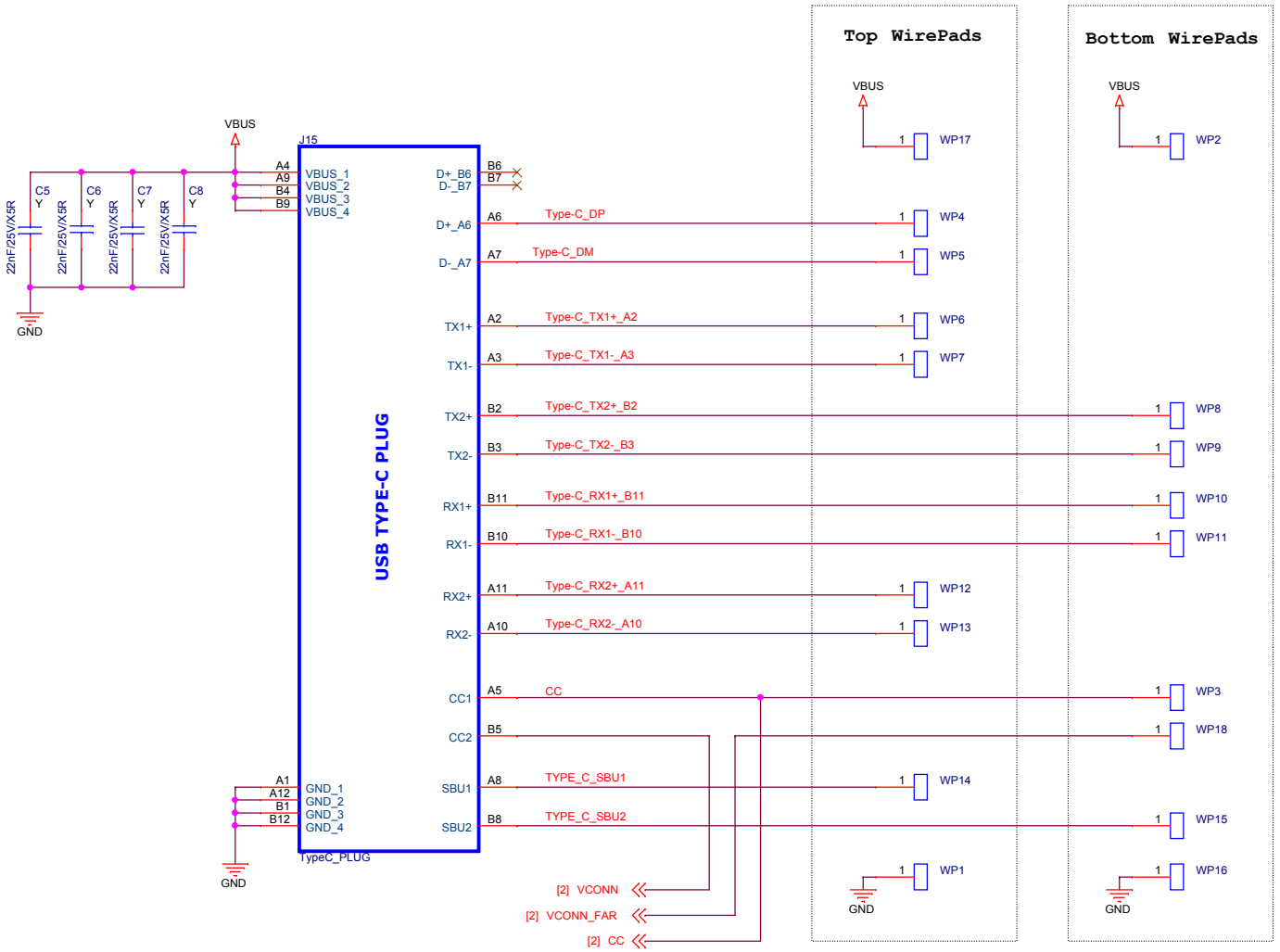

Title	CCG1 EMCA Paddle Card Reference Design	
Size B	Document Number <Doc>	Rev 1
Date: Monday, April 06, 2015	Sheet 2 of 3	

CCG1 CYPD1103-35FNXI

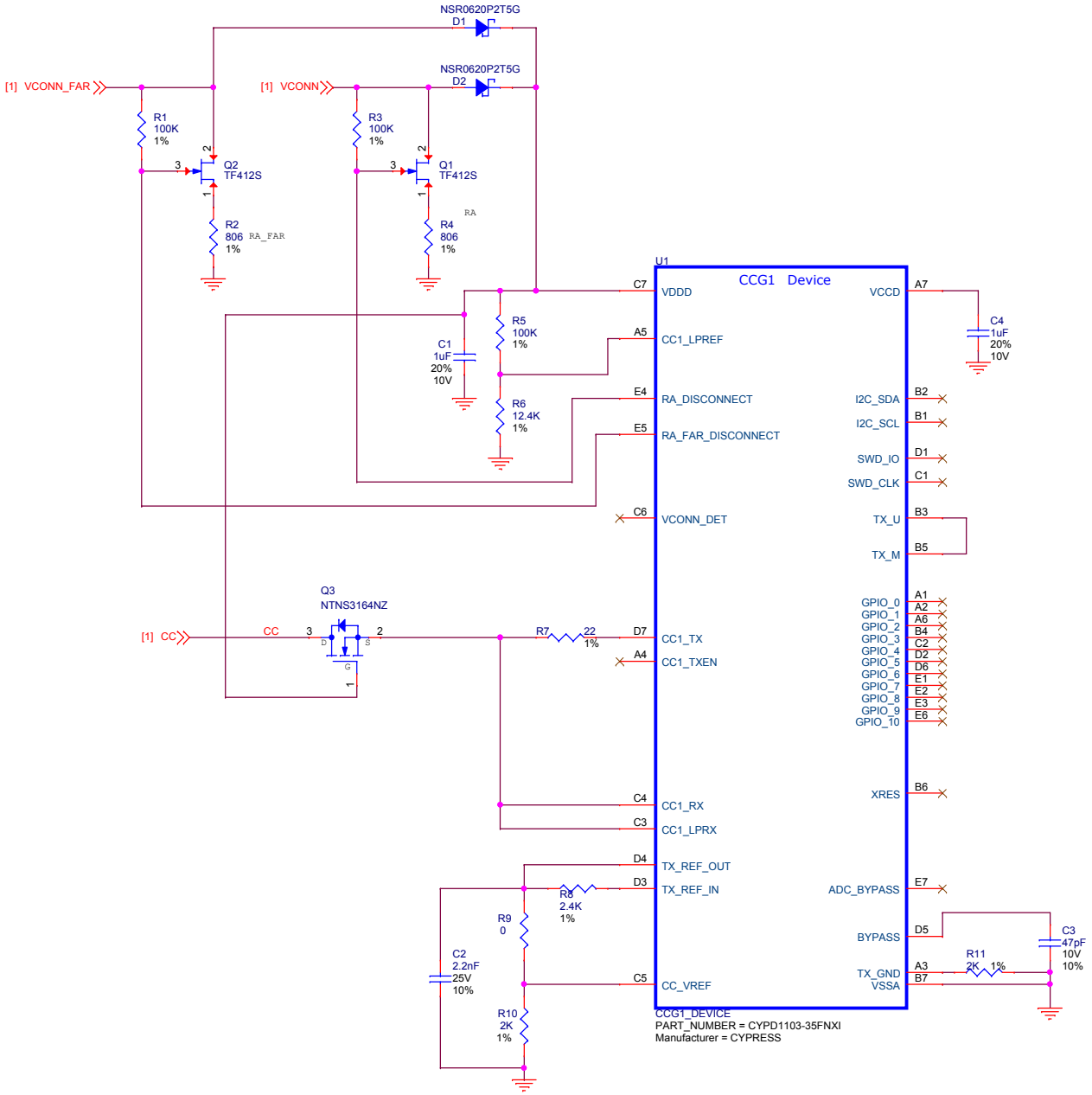

Title	CCG1 EMCA Paddle Card Reference Design	
Size B	Document Number <Doc>	Rev 1
Date: Monday, April 06, 2015	Sheet 3 of 3	